网站图纸

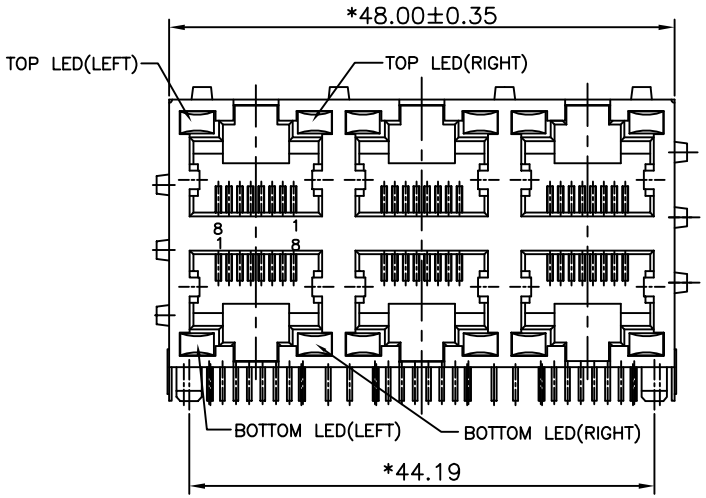

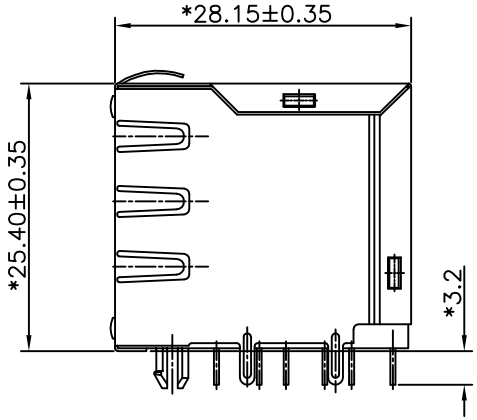

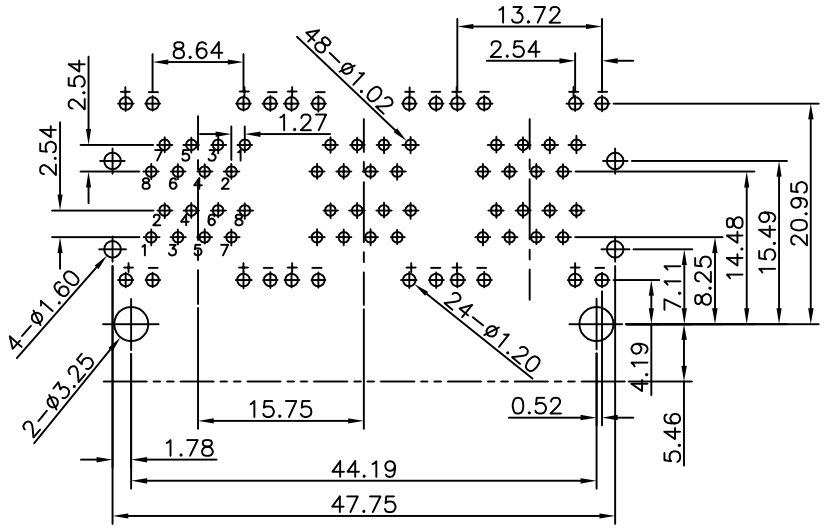

PCB Board Layout Compenent Side Shown

PCB Layout tolerance ±0.05mm

NOTES:

ELECTRICAL:

1. VOLTAGE RATING : 125 VAC RMS.
2. CURRENT RATING : 1.5 AMP.
3. CONTACT RESISTANCE : 50 MILLIOHMS MAX.
4. INSULATION RESISTANCE : 1000 MEGOHMS MIN @ 500 VDC.
5. DIELECTRIC STRENGTH : 1000 VAC RMS 60Hz, 1MIN.

MECHANICAL:

1. HOUSING MATERIAL : GLASS FILLED POLYESTER.
2. INSERT MATERIAL : GLASS FILLED POLYESTER.
3. CONTACT MATERIAL : PHOSPHOR BRONZE ø0.46mm
4. PLATING : GOLD PLATING OVER NICKEL.
5. OPERATING LIFE : 750 CYCLES MIN.
6. PCB RETENTION PRE-SOLDER : 1 LB MIN.
7. PCB RETENTION POST-SOLDER: 10 LBS MIN.

ENVIRONMENTAL:

1. STORAGE: -40°C TO +85°C.
2. OPERATION: -40°C TO +85°C.

MATES WITH MODULAR PLUG CONFORMING TO FCC PART 68, SUBPART F.

PART NUMBER: ZW2J88-0XFKYJX

A-RIGHT:GREEN LEFT:GREEN
B-RIGHT:ORANGE LEFT:GREEN
C-RIGHT:YELLOW LEFT:GREEN
L-RIGHT:GREEN LEFT:YELLOW

1- 3u" 2- 6u"
3-15u" 4-30u"
5-50u" F-GOLD FLASH

REVISION RECORD				

MM (INCH)	DFTO WYJ	DATE 07/18/09'	ZSNOW ELECTRONIC CO., LTD
TOLERANCES EXCEPT AS NOTED	CHKD OSCAR	DATE 07/19/09'	
MM .0 ±0.30 ± .00 ±0.20 ± .000 ±0.10 ±	MFO	DATE	TITLE 2*3 LED JACK (PITCH=15.75)
	APPVL SKYCHEN	DATE 07/19/09'	
ANGLES ±	MATERIAL :		DRAWING NO. ZW2J88-0XFKYJX / PART NO. SEE NOTE — SIZE A3 — REV P1
THIRD ANGLE PROJECTION	QT'Y :		
	FINISH :		
DETACHED LISTS	SCALE : 5:4		DO NOT SCALE DRAWING — SHEET 1 OF 1